GETTO PIATTO A SIFONE O PER GRAVITÀ
FLAT SPRAY SIPHON OR GRAVITY
SALIDA PLANA POR SIFÓN O GRAVEDAD

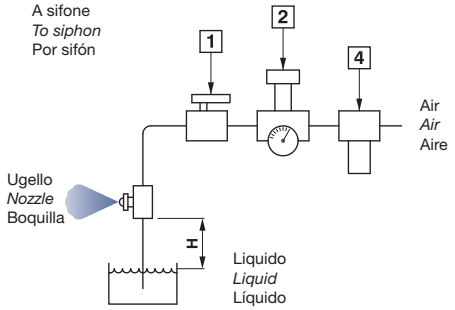

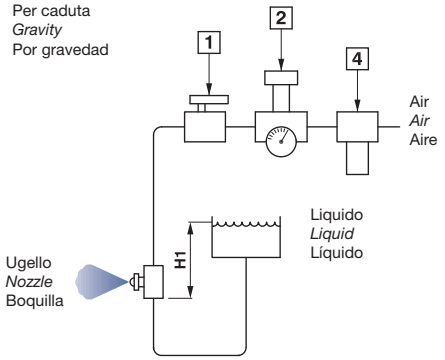

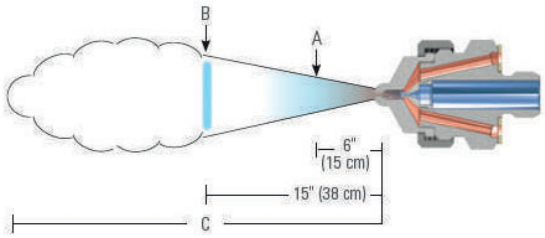

I set-up di miscelazione esterna sono ideali per liquidi viscosi o che tengono solidi sospesi. Le dimensioni A e B mostrano le coperture alle diverse distanze, oltre la distanza C il getto diventa frastagliato.

The external mixing set-ups are ideal for viscous liquids or those that hold suspended solids. The dimensions A and B show the coverages at different distances, beyond the distance C the jet becomes jagged.

Las configuraciones externas de mezcla son ideales para líquidos viscosos o para aquellos que contienen sólidos suspendidos. Las dimensiones A y B muestran Las coberturas a diferentes distancias, más allá de la distancia C, el chorro se vuelve irregular.

Spray set-up	*Atomizing Air*		*Liquid Capacity (liters per hour)*								*Spray H = 20 cm*			
	Air press. bar	Air l/min	GRAVITY H1			SIPHON H								
			45 cm	30 cm	15 cm	10 cm	20 cm	30 cm	60 cm	90 cm	Air bar	A cm	B cm	C m
B3 - S21	0.7	28	1.3	1.2	1.1	1.0	0.95	0.83	0.64	0.49	0.7	20	26	2.1
	1.5	43	1.2	1.1	1.0	0.90	0.86	0.78	0.66	0.54	1.5	21	29	
	2.0	50	0.82	0.76	0.68	0.57	0.50				2.0	23	30	
B4 - S22	1.5	56	3.7	3.5	3.3	2.9	2.8	2.5	2.3	2.1	1.5	23	32	2.7
	2.0	65	3.4	3.3	3.1	2.8	2.7	2.6	2.4	2.2	2.0	24	34	2.7
	3.0	87	2.8	2.7	2.5	2.4	2.2	2.1	1.9	1.7	3.0	27	37	3.0
	4.0	110	1.9	1.8	1.6	1.5	1.3	1.2			4.0	28	39	2.7
B5 - S23	1.5	68	5.1	4.8	4.5	3.8	3.7	3.5	3.0	2.4	1.5	19	23	3.4
	2.0	78	4.9	4.7	4.4	3.6	3.4	3.2	2.9	2.3	2.0	20	25	
	3.0	103	3.4	3.2	3.0	2.2	2.0	1.7			3.0	22	27	
	3.5	117	2.2	2.0	1.7									
B5 - S24	1.5	63	7.6	7.2	6.6	5.7	5.4	5.1	4.6	3.7	1.5	17	22	3.4
	2.0	73	7.6	7.3	6.8	5.9	5.7	5.5	5.0	4.2	2.0	18	23	3.4
	3.0	96	6.4	6.1	5.7	5.0	4.5	4.1	3.3		3.0	20	27	3.4
	3.5	110	4.2	3.7	3.2	2.6								